eurocell

All together better

Section X-X
Scale 1:4

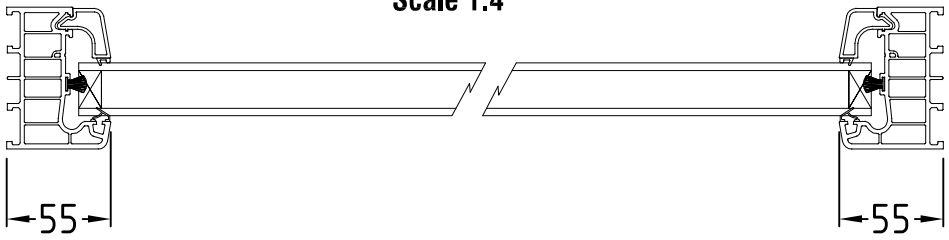


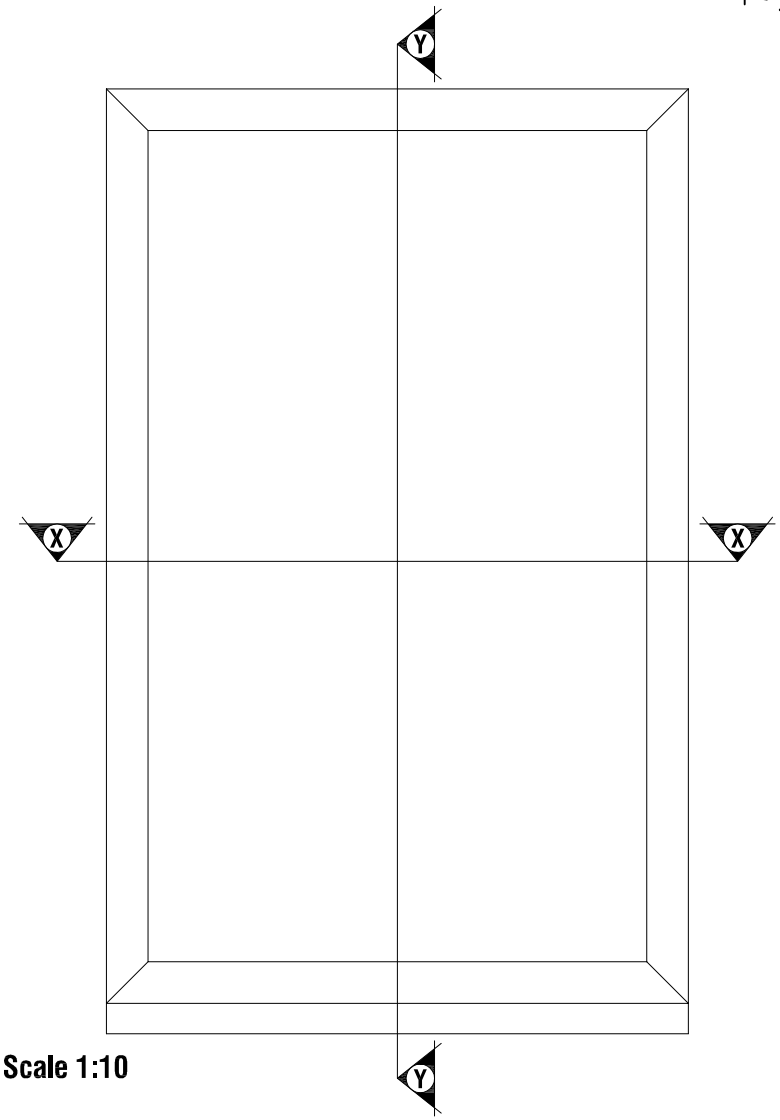


Sightline @ Scale 1:10

Section Y-Y
Scale 1:4

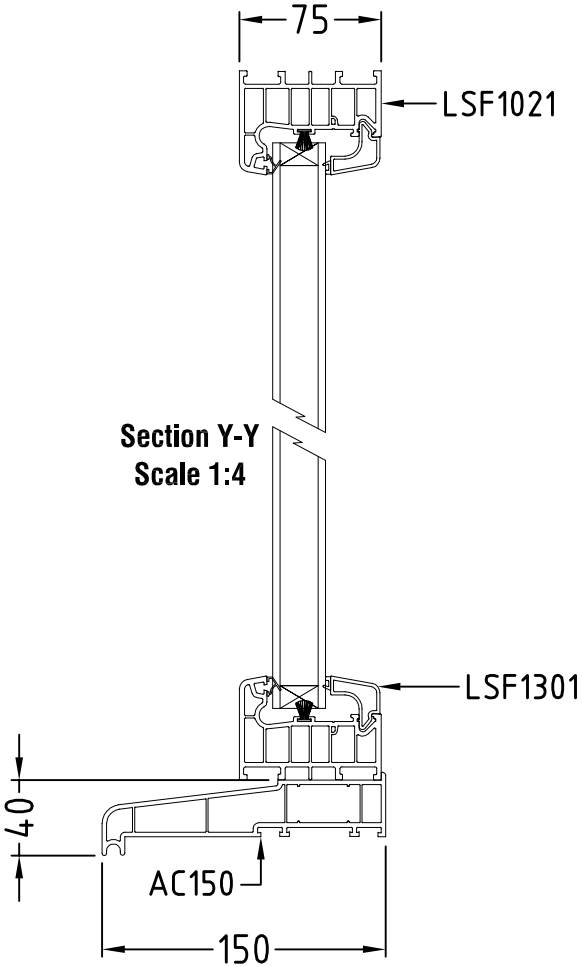


Type C1-005 (A4)