eurocell

All together better

Section X-X
Scale 1:4

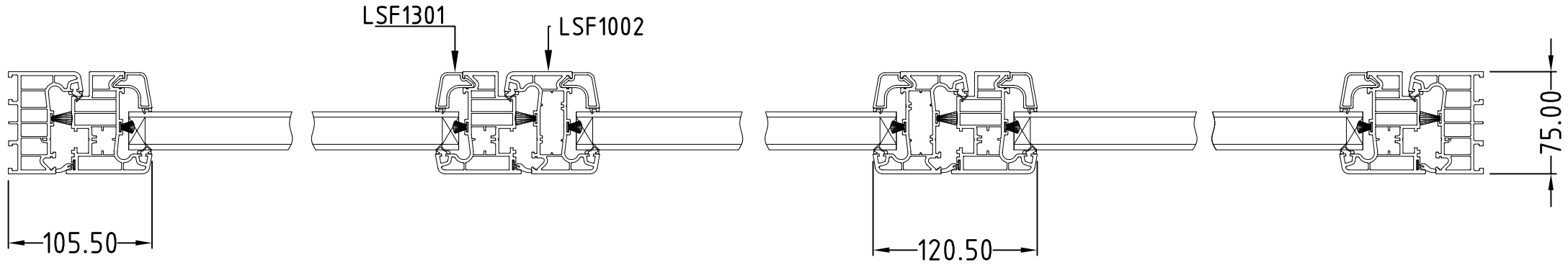

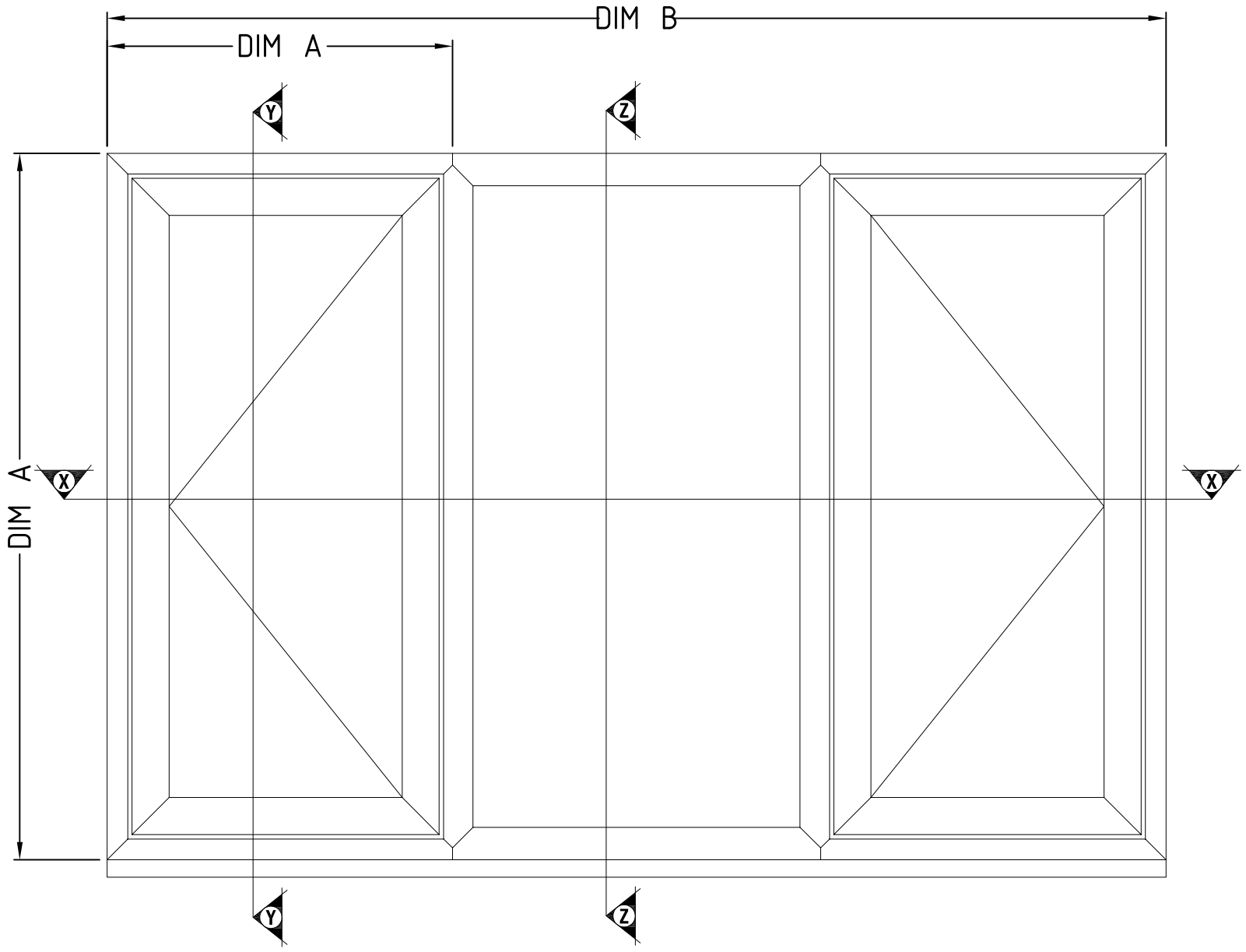

Section Y-Y
Scale 1:4

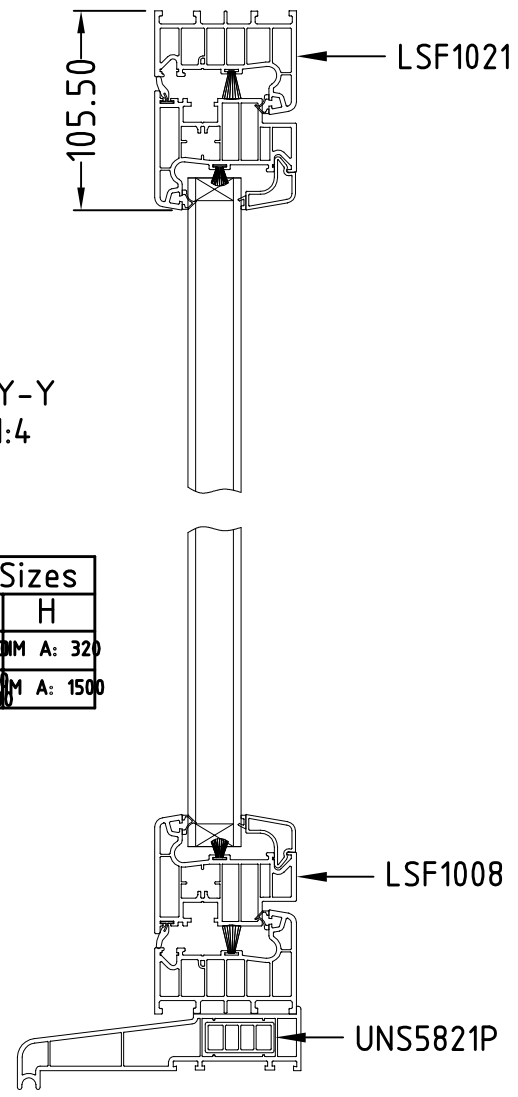

Window Sizes		
	W	H
Min	DIM A: 400	DIM A: 320
Max	DIM A: 750 DIM B: 3000	DIM A: 1500

Section Z-Z
Scale 1:4

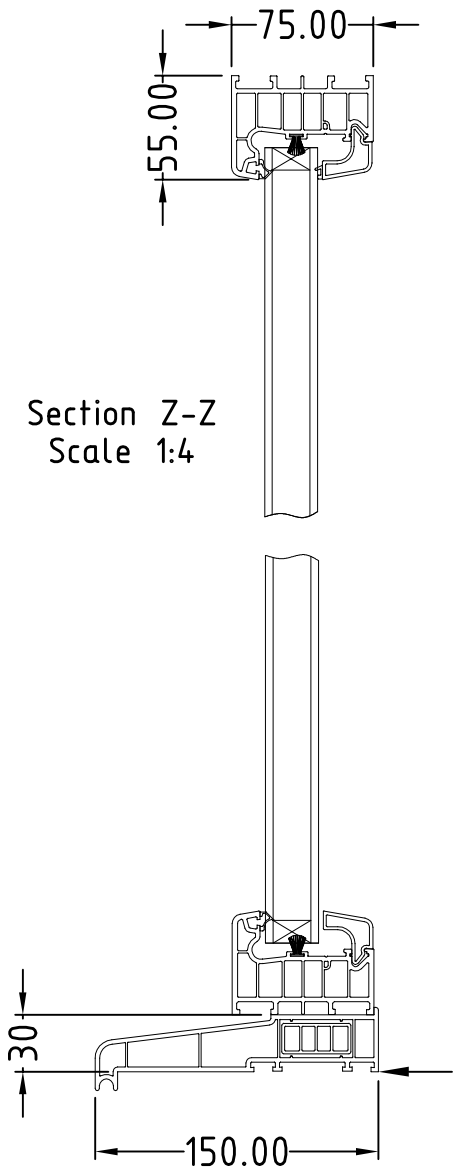

Sightline @ Scale 1:10

Type C15-009 (A3)