eurocell

All together better

Section X-X
Scale 1:4

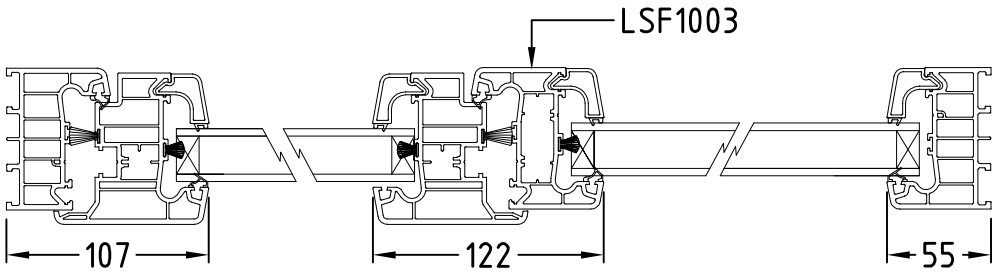

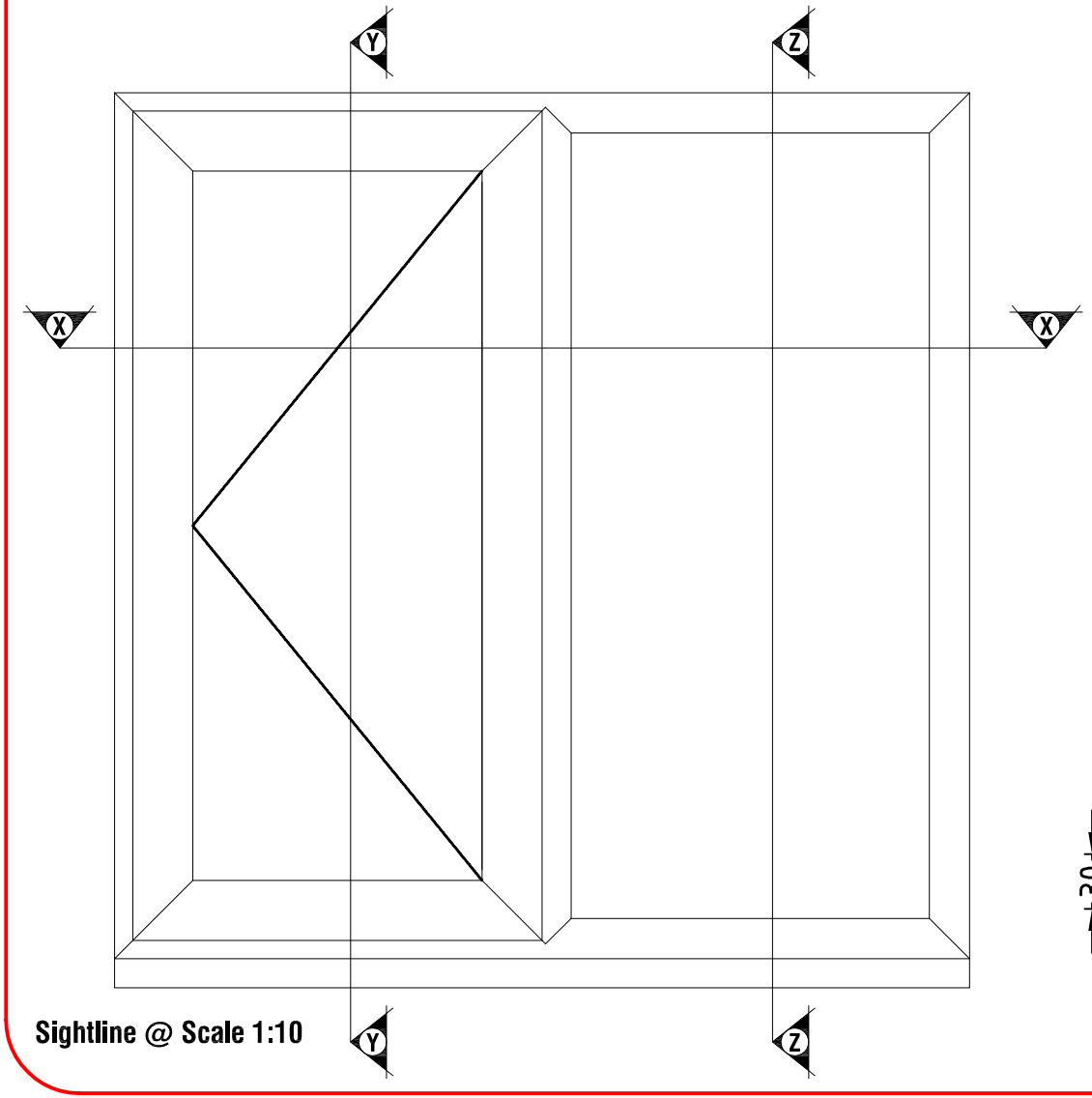

Sightline @ Scale 1:10

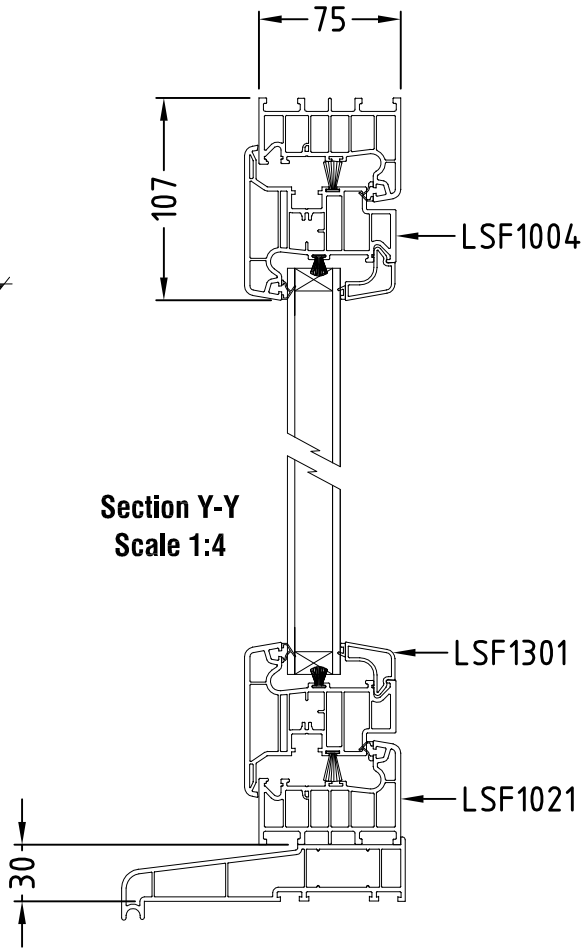

Section Y-Y
Scale 1:4

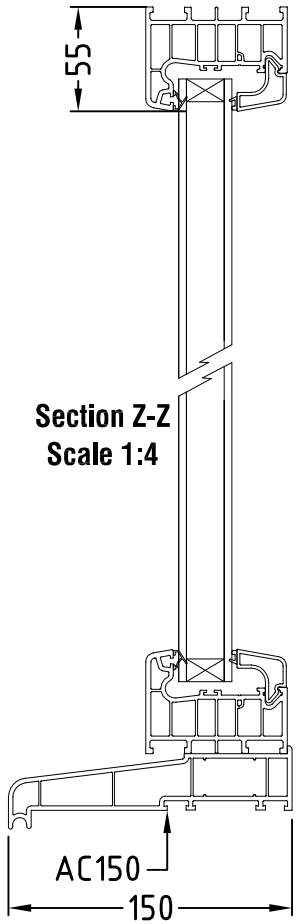

Section Z-Z
Scale 1:4

Type C10-015 (A4)