eurocell

All together better

Section X-X
Scale 1:4

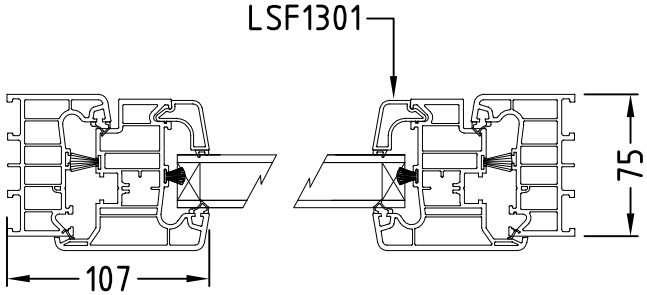

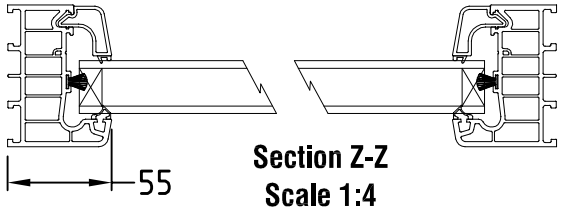

Section Z-Z
Scale 1:4

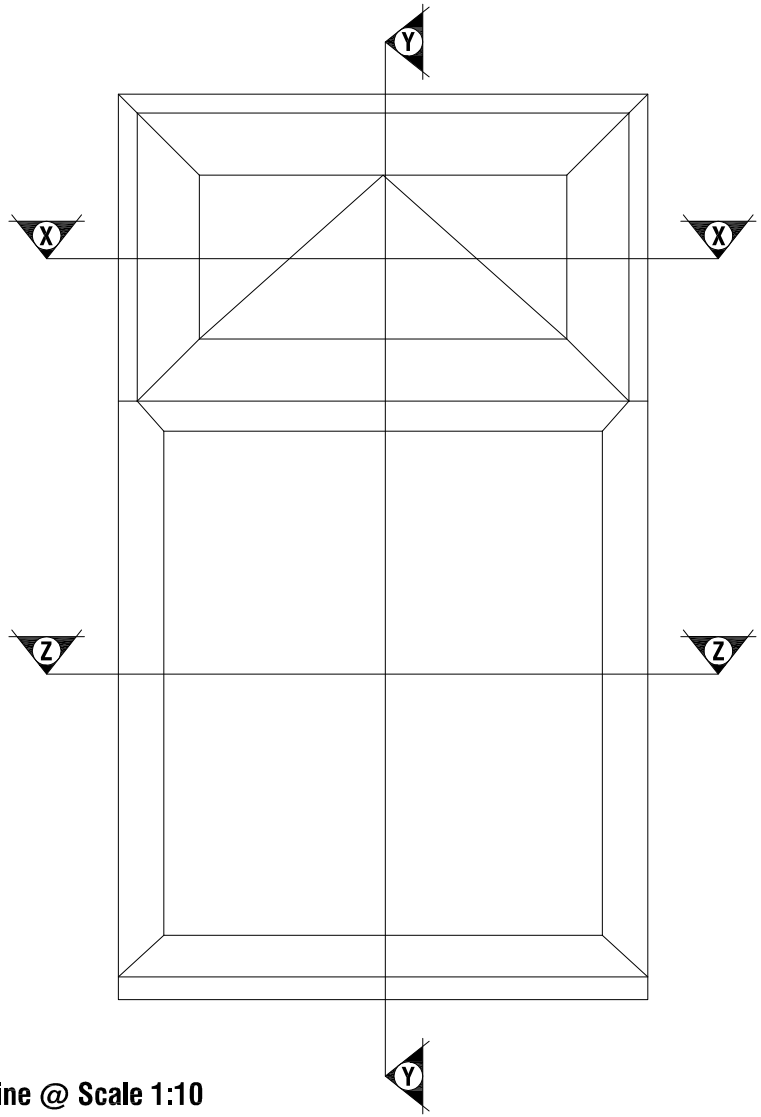

Sightline @ Scale 1:10

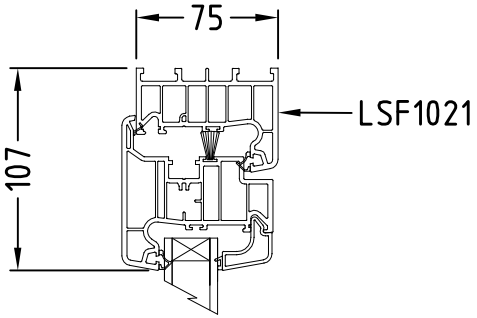

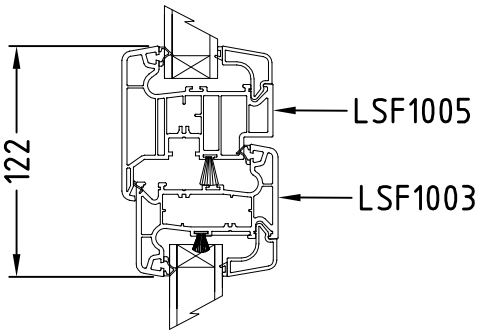

Section Y-Y
Scale 1:4

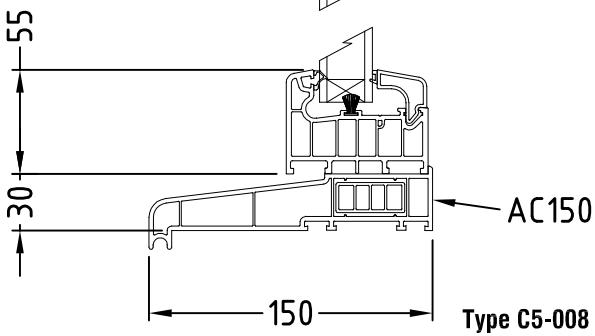

Type C5-008 (A4)