eurocell

All together better

Sightline @ Scale 1:10

Refer to Sheet 2 for section details

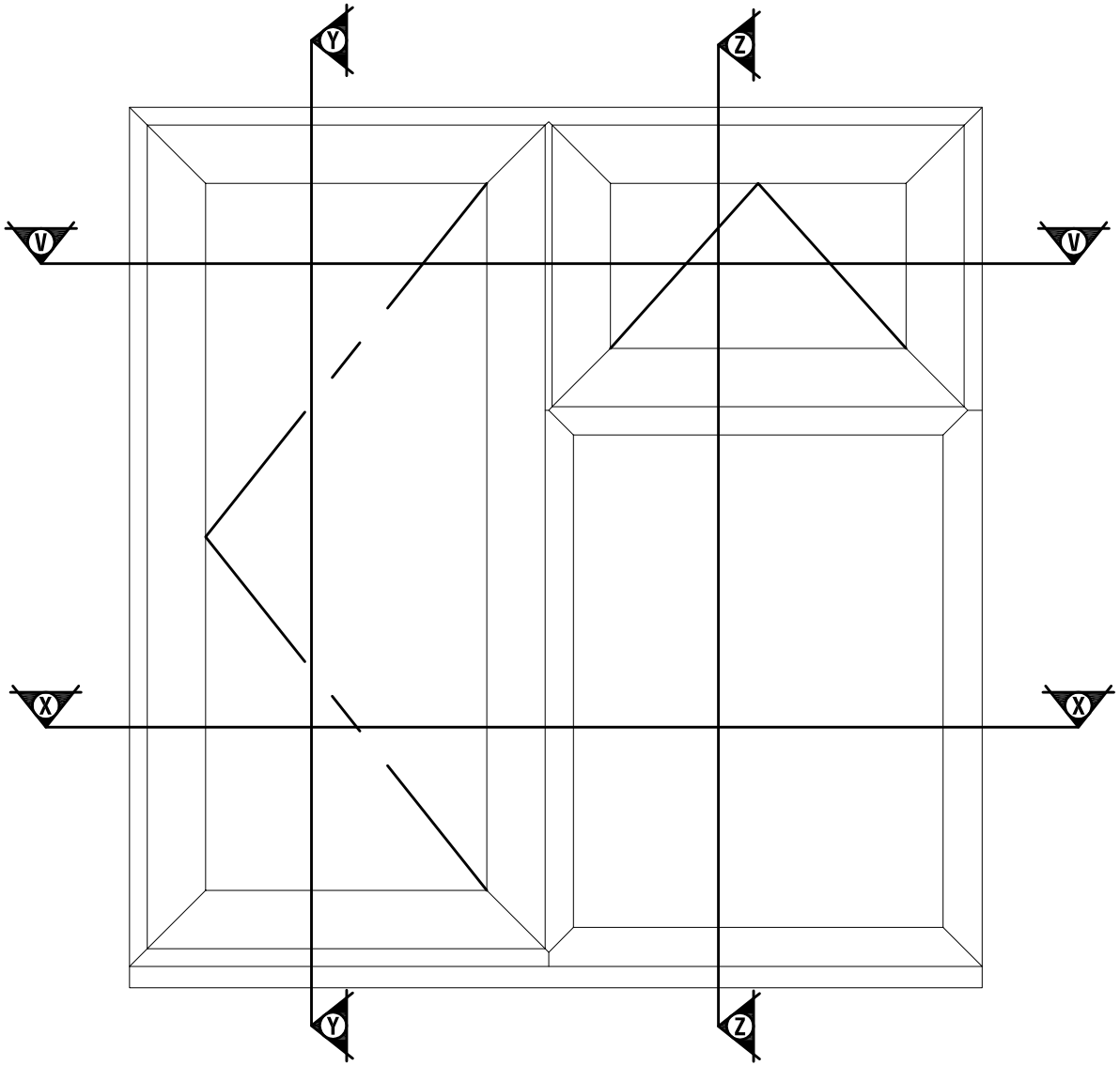

Type C9-005 (A4)

Sheet 1 of 2

eurocell

All together better

Section V-V
Scale 1:4

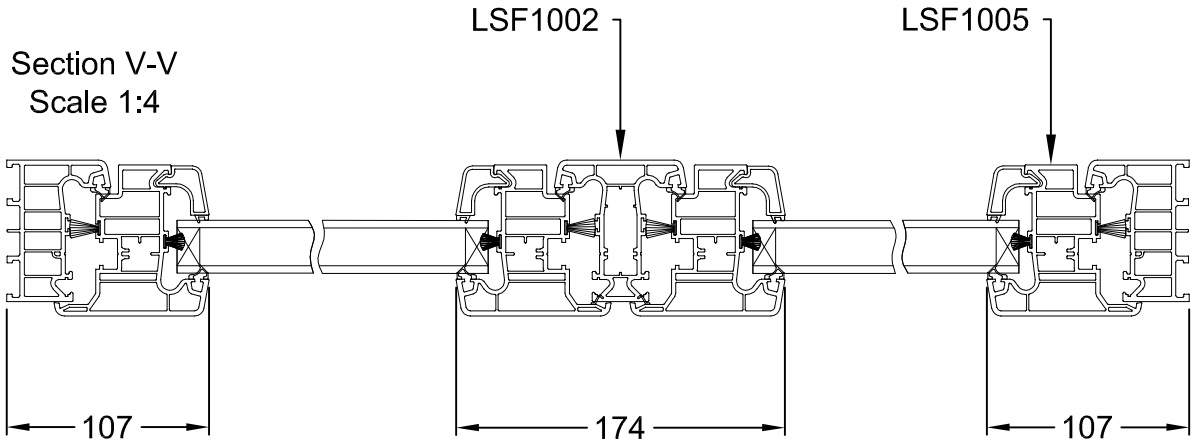

Section X-X
Scale 1:4

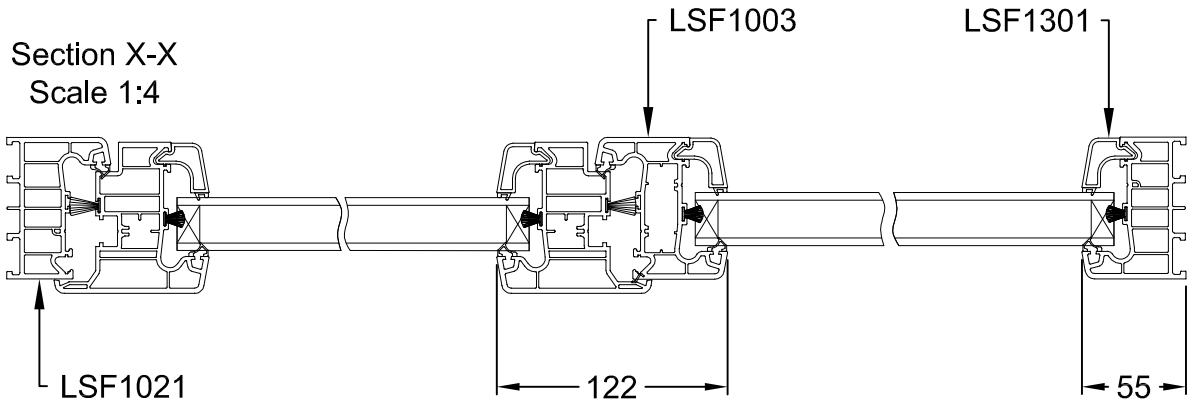

Refer to Sheet 1 for Elevation detail

Section Z-Z
Scale 1:4

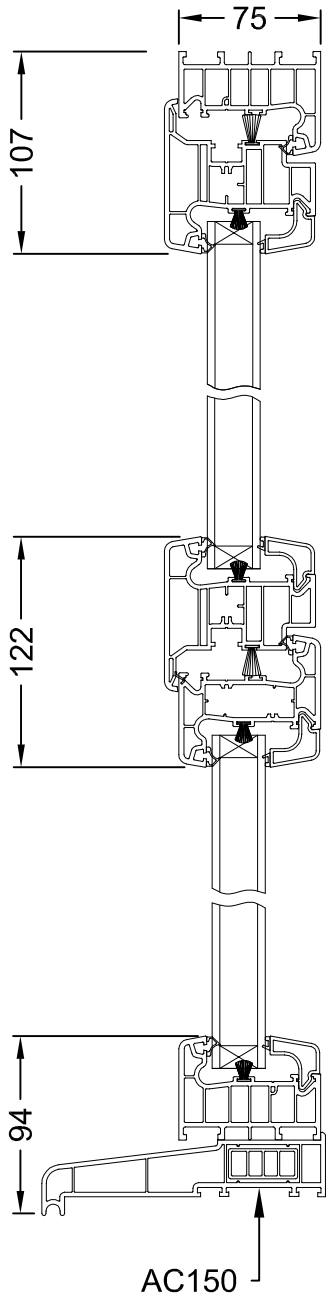

Section Y-Y
Scale 1:4

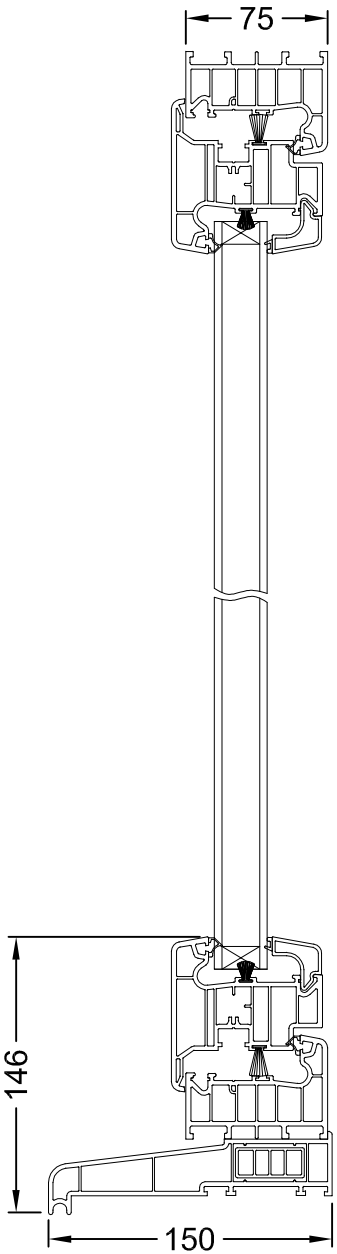

Type C9-005 (A4)
Sheet 2 of 2