eurocell

All together better

Section X-X
Scale 1:4

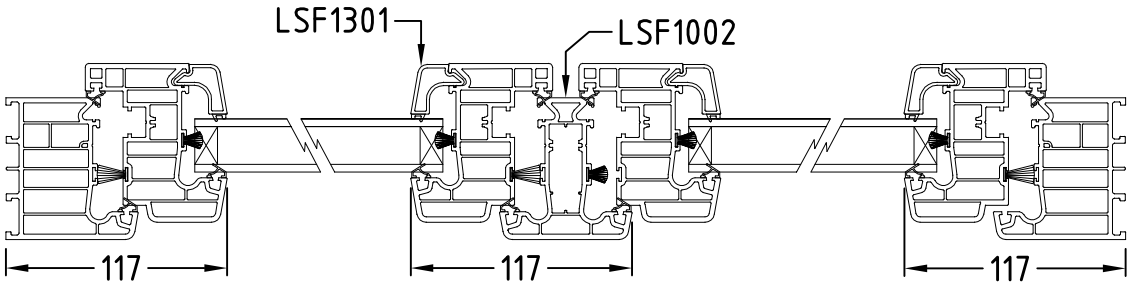

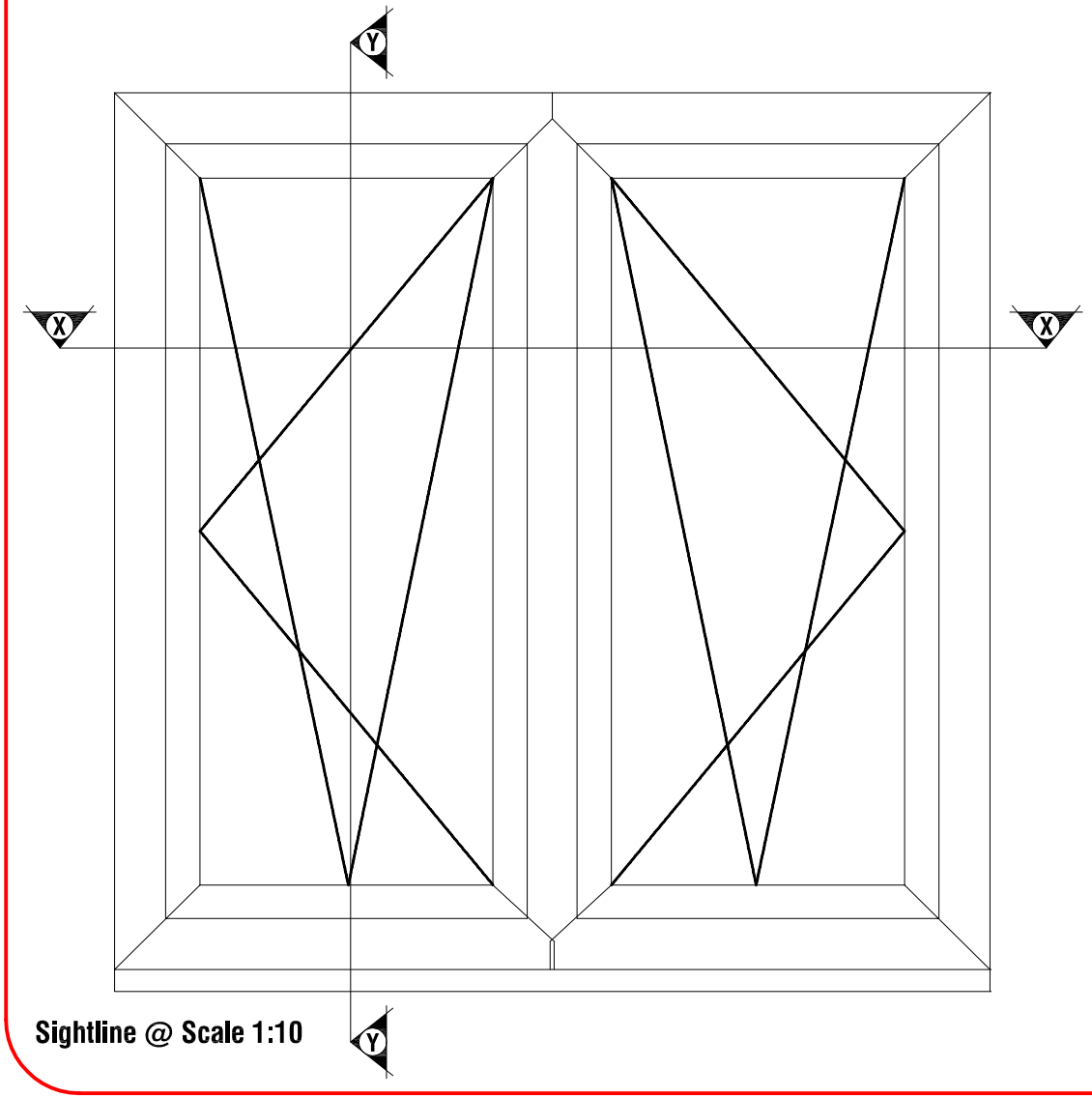

Sightline @ Scale 1:10

Section Y-Y
Scale 1:4

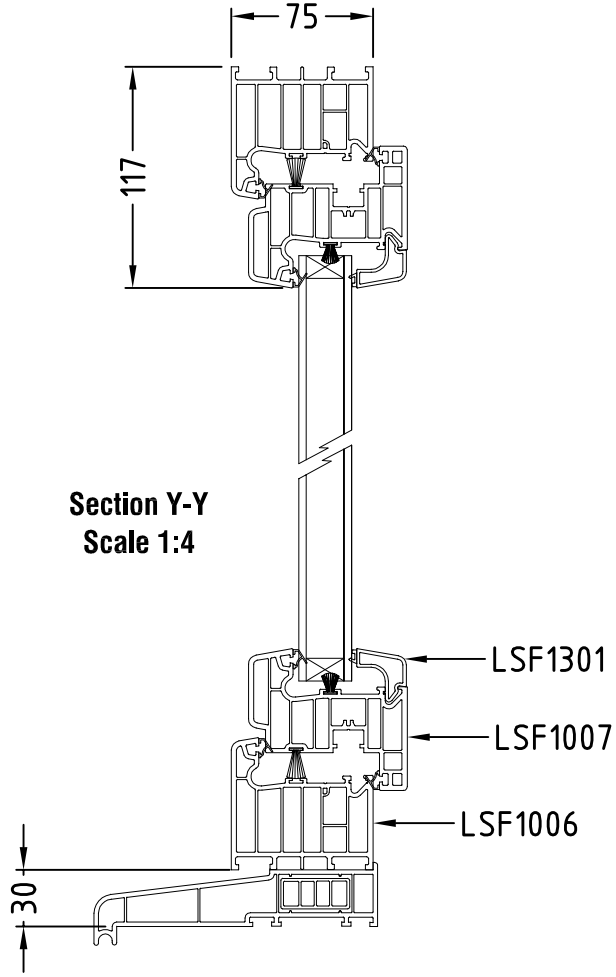

Type T3-003 (A4)